QS-400
QuickSTOP Collision Sensor

QuickSTOP is a dynamically variable collision sensor that operates on air pressure. At impact, the air chamber is opened, and the shutdown signal is immediately sent to the system controller.

Features and Benefits

- Dynamically variable trip points allow you to program your collision sensor at all speeds of an operation. The breaka-way threshold adjusts to match the working force ranges of your robot/application.
- All QuickSTOP models feature a non-compressive, metal to metal seal which ensures reliable and consistent operation, giving you permanent repeatability.
- Senses angular and compressive forces. QuickSTOP's unique design offers protection in the X,Y, and Z axes
- QuickSTOP monitors performance readiness. When pres-surized, the pressure switch is closed indicating that the QuickSTOP is reset in the proper position.
- At the moment of impact, the QuickSTOP's air chamber is opened, exhausting pressure which instantly opens the pressure switch and causes loss of signal.
- Pressure loss upon impact offers better tool protection as the QuickSTOP absorbs energy and removes the force from your tool and robot wrist.
- Solid state switch employs a solid state pressure sensor and surface mount interface electronics., all self-contained within a sealed housing. Dynamic operating range is 15-90 psi. Separate solid state PNP (sourcing) and NPN (sinking) outputs, rated at 200mA each.

Applications

- Material Handling
- Machine loading/unloading
- Pick and place operations

Not exactly what your application requires? Applied Robotics can design a solution that meets your particular application needs.

SPECIFICATIONS

Compliance Angle	**+/-5deg**
Axial Compliance	**6.60 mm .265 in**
Rotary Compliance	**No Limit**
Operating Pressure	**1.0 - 6.0 bar (14.5-87 psig)**
Torque trip point Mz continuously variable	**11.8 - 84.6 N-m 104 - 749 in-lb**
Moment trip point Mx & My continuously variable	**11.3 - 63.9 N-m 100 - 566 in-lb**
Repeatability at tool mounting surface X and Y axes	**+/- 0.025 mm +/- 0.0005 in**
Z axis	**+/- 0.013 mm +/- 0.0005 in**
Rotational	**+/- 0.419 radians (10^{-3}) +/- 0.024 degrees**
Mass	**1.3 kg 2.9 lb**
Center of mass (from robot adapter plate)	**32.6 mm 1.29 in**
Average response time	**<15 ms**
Operating Temperature	**Min. 0 Deg C (32 Deg F) Max. 100 Deg C (212 Deg F)**

Switch Description

Solid State Dynamic operation range is 15-90 psi. Separate solid state PNP (sourcing) and NPN (sinking) outputs, rated at 200 mA.

Applied Robotics™ Solutions in reach

Applied Robotics Europe™ Solutions in reach

Engineering Data

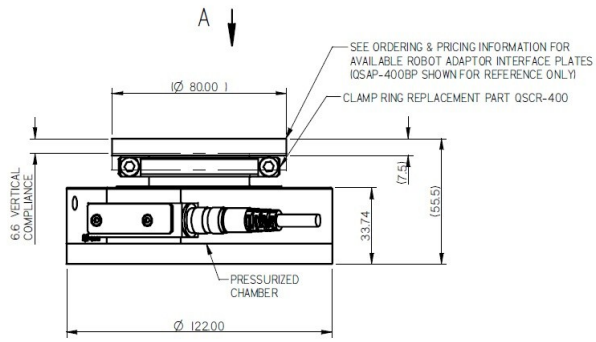

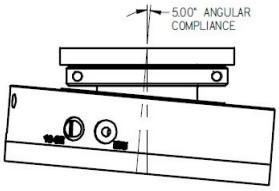

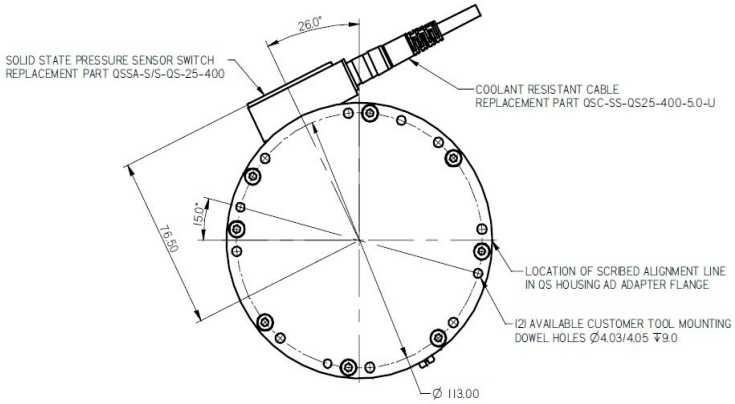

Note: Specifications provided are maximum recommended limits under static conditions. For correct product sizing, consideration must be given to all dynamic forces, including manipulator inertia, tooling configuration and external process forces.

Note: For correct product sizing, please contact our Tech Support staff at techsupport@appliedrobotics.com or at (800) 309-3475 or (518) 384-1000.

All dimensions are in millimeters

Moment Charts*

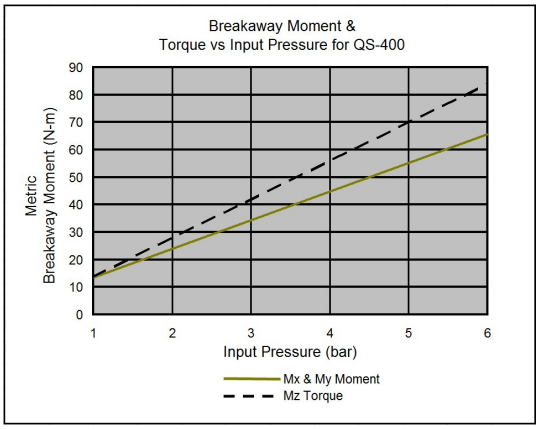

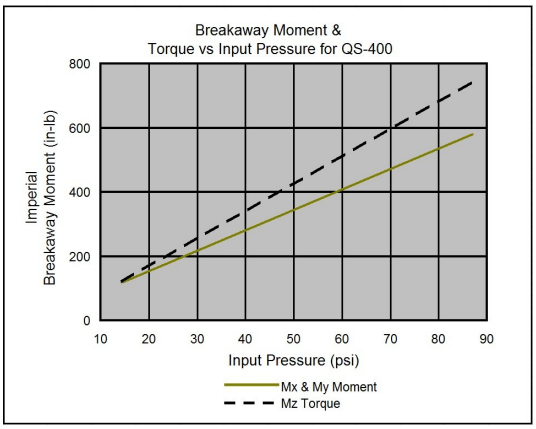

*Charts are based on typical values. Individual units may vary from published data.

Applied Robotics Inc.
648 Saratoga Road
Glenville, NY 12302 USA
518 384 1000 tel
518 384 1200 fax

Applied Robotics Inc.
540 North Lapeer Road #365 Orion
Township, MI 48362 USA
248 358 3677 tel
248 358 2654 fax

Applied Robotics Europe
Via Roma 141/143
28017 San Maurizio d'Opaglio (NO) -Italy
Tel: +39 0322 96593
Email: info@appliedrobotics.eu

www.arobotics.com

nqa. ISO 9001 Registered